Braytron

TECHNICAL DATA SHEET

MODEL	BG39-00401
DESCRIPTION	BRY-VEKSUS-SQR-BLC-3W-3000K-IP65-STEPLIGHT

IP65

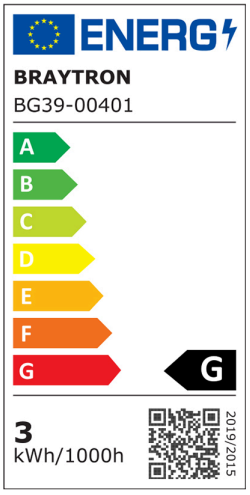

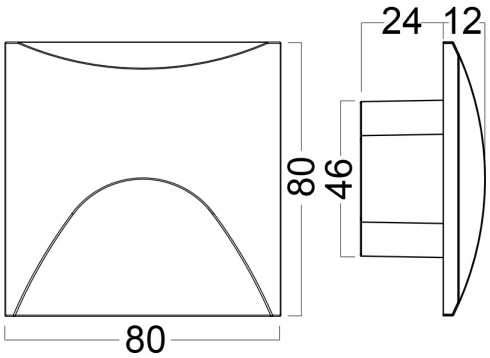

BRAYTRON SRL

MUNICIPIUL BUCUREŞTI, SECTOR 6, BLD. IULIU MANIU, NR.616, CORP B, ET.1,BUCUREŞTI,Sector 6(RO)
info@braytron.com
www.braytron.com

Braytron

TECHNICAL DATA SHEET

General Characteristics		
Model No	:	BG39-00401
Main Family	:	Indoor Lighting
Sub Family	:	Steplight
Type	:	Steplight
Body Color	:	Black
Lamp Shape	:	Non-Directional
Dimmable	:	Not-Dimmable
Warranty	:	2 Years
Class	:	CLASS I
IP	:	IP65

Product Characteristics		
Wattage	:	3 w
Color Temperature	:	3000K
Quse Lumen	:	180 lm
Color Rendering Index (CRI)	:	≥80
Energy Efficiency Level	:	G

Electrical Characteristics		
Lifetime	:	20000 h
Voltage	:	220-240V 50/60Hz
Material	:	Aluminium+PC
Working Temperature	:	-20°C ~ +40°C

Dimensions & Weight		
P. Length	:	80 mm
P. Width	:	80 mm
P. Height	:	40 mm
Cutout	:	68 mm

Package Informations		
PCS/CTN	:	40
Length	:	38,5 cm
Width	:	37,5 cm
Height	:	20,5 cm
EAN	:	5949097752162

BRAYTRON SRL

MUNICIPIUL BUCUREŞTI, SECTOR 6, BLD. IULIU MANIU, NR.616, CORP B, ET.1,BUCUREŞTI,Sector 6(RO)
info@braytron.com
www.braytron.com