Braytron

TECHNICAL DATA SHEET

MODEL	BH03-06040
DESCRIPTION	BRY-ALFA-E-RND-F.WHT-SPOTLIGHT FIXTURE

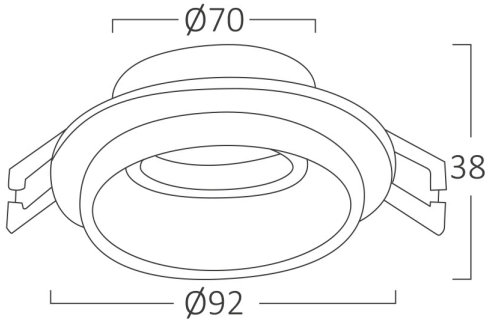

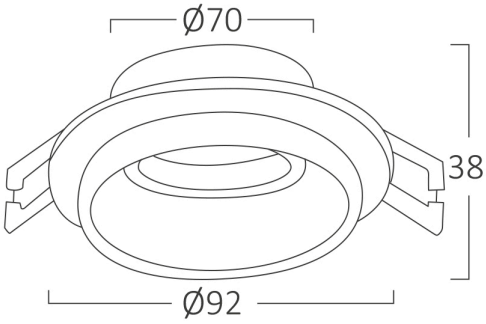

BRAYTRON SRL

MUNICIPIUL BUCUREŞTI, SECTOR 6, BLD. IULIU MANIU, NR.616, CORP B, ET.1,BUCUREŞTI,Sector 6(RO)
info@braytron.com
www.braytron.com

Braytron

TECHNICAL DATA SHEET

General Characteristics

Model No	:	BH03-06040
Main Family	:	Indoor Lighting
Sub Family	:	GU10 Recessed Spotlight
Type	:	Spotlight
Body Color	:	White
Warranty	:	2 Years
IP	:	IP20

Product Characteristics

Max. wattage	:	Max.1×35 w

Electrical Characteristics

Material	:	Aluminium
Working Temperature	:	-20°C ~ +40°C

Dimensions & Weight

Diameter	:	92 mm
P. Height	:	38 mm
Cutout	:	70 mm
Weight	:	100 gr

Package Informations

N.W.	:	5 kgs
G.W.	:	6,5 kgs
PCS/CTN	:	50
Length	:	52 cm
Width	:	25 cm
Height	:	22 cm
EAN	:	5949097728891

BRAYTRON SRL

MUNICIPIUL BUCUREŞTI, SECTOR 6, BLD. IULIU MANIU, NR.616, CORP B, ET.1,BUCUREŞTI,Sector 6(RO)
info@braytron.com
www.braytron.com