Braytron

TECHNICAL DATA SHEET

MODEL	BH16-06287
DESCRIPTION	BRY-BLADE-PD-RND-WDN-45W-3IN1-CEILING LIGHT

3 CCT

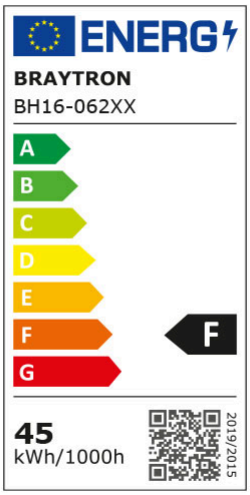

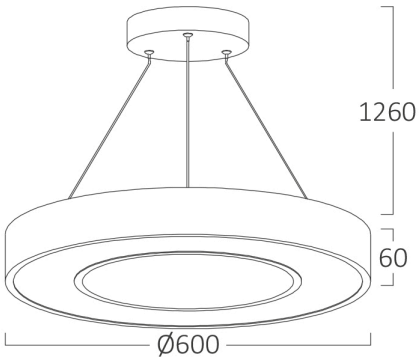

BRAYTRON SRL

MUNICIPIUL BUCUREŞTI, SECTOR 6, BLD. IULIU MANIU, NR.616, CORP B, ET.1,BUCUREŞTI,Sector 6(RO)
info@braytron.com
www.braytron.com

Braytron

TECHNICAL DATA SHEET

General Characteristics

Model No	:	BH16-06287
Main Family	:	Decorative LED
Sub Family	:	Pendant Light Blade
Type	:	Pendant
Body Color	:	11
Lamp Shape	:	Non-Directional
Dimmable	:	1
Light Source	:	0
Warranty	:	3
Class	:	Class I
IP	:	0

Product Characteristics

Wattage	:	45
Color Temperature	:	4
Quse Lumen	:	4650
Color Rendering Index (CRI)	:	1
Energy Efficiency Level	:	F
Beam Angle	:	26

Electrical Characteristics

Lifetime	:	20000 h
Voltage	:	16
Power Factor	:	>0,9
Material	:	Metal
Working Temperature	:	-20°C ~ +40°C

Dimensions & Weight

Diameter	:	600 mm
P. Height	:	1260 mm
Weight	:	2100 gr

Package Informations

N.W.	:	6,30 kgs
G.W.	:	8,90 kgs
PCS/CTN	:	3
Length	:	670 mm
Width	:	280 mm
Height	:	670 mm
EAN	:	5949097717161

BRAYTRON SRL

MUNICIPIUL BUCUREŞTI, SECTOR 6, BLD. IULIU MANIU, NR.616, CORP B, ET.1,BUCUREŞTI,Sector 6(RO)
info@braytron.com
www.braytron.com