Braytron

TECHNICAL DATA SHEET

MODEL	BT61-01032
DESCRIPTION	BRY-FLOOD-SL-10W-GRY-6500K-IP65-LED FLOODLIGHT

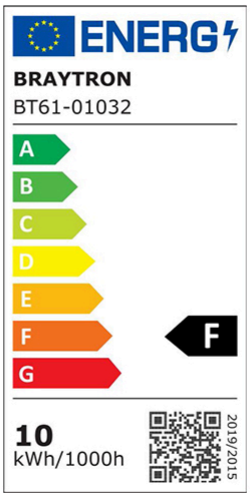

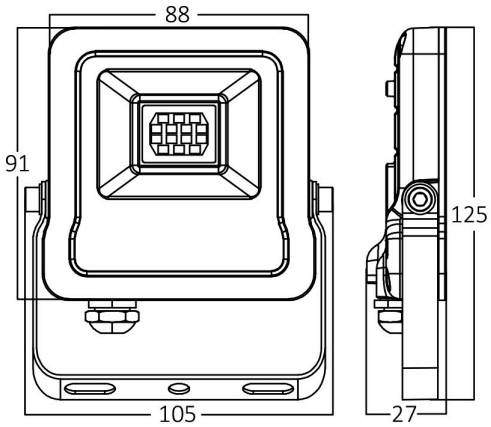

BRAYTRON SRL

MUNICIPIUL BUCUREŞTI, SECTOR 6, BLD. IULIU MANIU, NR.616, CORP B, ET.1,BUCUREŞTI,Sector 6(RO)
info@braytron.com
www.braytron.com

Braytron

TECHNICAL DATA SHEET

General Characteristics

Model No	:	BT61-01032
Main Family	:	Outdoor Lighting
Sub Family	:	LED Floodlight
Type	:	Flood
Body Color	:	Grey
Lamp Shape	:	Directional
Dimmable	:	Not-Dimmable
Light Source	:	LED
Warranty	:	3 years
Class	:	Class I
IP	:	IP65

Product Characteristics

Wattage	:	10
Color Temperature	:	6500K
Quse Lumen	:	800
Color Rendering Index (CRI)	:	>70
Energy Efficiency Level	:	F
Beam Angle	:	120°

Electrical Characteristics

Lifetime	:	20000 h
Voltage	:	220-240V 50/60Hz
Power Factor	:	>0,9
Material	:	Aluminium
Working Temperature	:	-20^{0}C ~ +40^{0}C

Dimensions & Weight

P. Length	:	105 mm
P. Width	:	27 mm
P. Height	:	125 mm
Weight	:	220 gr

Package Informations

N.W.	:	7,92 kgs
G.W.	:	9,60 kgs
PCS/CTN	:	36
Length	:	350 mm
Width	:	220 mm
Height	:	295 mm
EAN	:	5949097702518

BRAYTRON SRL

MUNICIPIUL BUCUREŞTI, SECTOR 6, BLD. IULIU MANIU, NR.616, CORP B, ET.1,BUCUREŞTI,Sector 6(RO)
info@braytron.com
www.braytron.com